arXiv:quant-ph/0503069v1 7 Mar 2005

Optical implementability of the two–dimensional Quantum Walk

Eugenio Roldán and J.C. Soriano
Departament d'Òptica, Universitat de València,
Dr. Moliner 50, 46100–Burjassot, Spain

February 1, 2008

Abstract

We propose an optical cavity implementation of the two–dimensional coined quantum walk on the line. The implementation makes use of only classical resources, and is tunable in the sense that a large number of different unitary transformations can be implemented by tuning some parameters of the device.

1 Introduction

The quantum walk (QW) is an interesting quantum process that is attracting much attention from the algorithmic point of view [1], but also because of its intrinsic interest [2] through its connection with quantum cellular automata [3], and with the physics of the systems in which it can be implemented. Two different types of QWs have been introduced, the so–called discrete and continuous QWs. The discrete QW can be thought of as a quantum version of the classical quantum walk [3, 4], whilst the continuous QW is a quantum generalization of the Markov chain [5]. In this article we shall deal only with the discrete QW.

As stated, the discrete QW can be shortly defined as a quantum counterpart of the random walk. In the random walk on the line, the "walker" moves to the right or to the left depending on the output of some random process, e.g., the toss of a coin. In the QW, the classical coin is substituted by a quantum one, a qubit, and the coin toss is replaced by some unitary operation acting on the qubit state, e.g, a Hadamard transformation. After the unitary operation, the qubit state is in a superposition state and thus there is a finite probability amplitude for the walker to move, in the same step, to the left and to the right. This leads to the appearance of interference phenomena in the probability distribution of the walker localization that makes it very different from its classical counterpart.

The coined QW in one dimension has been studied extensively along the recent years [6, 7, 8, 9, 10, 11, 12, 13, 14], and some generalizations of the basic process have been recently proposed [15, 16, 17, 18, 19, 20, 21]. Regarding

physical implementations, there are a number of proposals that consider quantum systems, i.e., systems whose dynamics can be described only within the framework of quantum mechanics [22, 23, 24, 25, 26]. Interestingly enough, the one–dimensional QW has been shown to be implementable by only classical means, i.e., in setups whose description does not require quantum mechanics [27, 28, 29, 30]; and, in fact, it has been nearly implemented in an optical cavity [31], as it is shown in [28, 29]. Moreover, it has been claimed that the one–dimensional QW is an interference phenomenon in which entanglement, a distinctive quantum feature, does not play any role [28] (see also [32] for a different view).

Of course, as it is the case for the random walk, the QW can be defined in a space of arbitrary dimensionality [33]. In the multidimensional case, in which the particle "walks" in a d–dimensional space, a qubit is necessary for each spatial dimension or, in other words, a d–dimensional QW requires a qu$d$it. This makes that the unitary transformations, the analogous to the coin toss, be more complex that in the unidimensional case. Multidimensional QWs have been studied in some detail in [34, 35] but, to the best of our knowledge, no proposal for its implementation is available to this day. In this article, we propose a way for implementing the two–dimensional quantum walk in an optical cavity.

2 Two–dimensional quantum walk

Let us briefly introduce the two–dimensional QW, whose implementation is our main goal. Consider a single particle (the walker) and a qu$d$it with four states that plays the role of the coin. Notice that the qu$d$it can correspond to internal states of the particle, although not necessarily. Let $\mathcal{H}_P$ be the Hilbert space of the particle positions on the plane and

$$\{|x,y\rangle = |x\rangle\,|y\rangle\,, x,y \in \mathrm{Z}\}\,, \tag{1}$$

a basis of $\mathcal{H}_P$; and let $\mathcal{H}_C$ be the four–dimensional Hilbert space describing coin–qu$d$it, and $\{|u\rangle\,,|d\rangle\,,|r\rangle\,,|l\rangle\}$ a basis of $\mathcal{H}_C$. The state of the total system belongs to the space $\mathcal{H} = \mathcal{H}_C \otimes \mathcal{H}_P$, and at a given instant of time, say at iteration n, can be expresed as

$$|\psi\rangle_n = \sum_{x,y} \left[r^{(n)}_{x,y}\,|x,y,r\rangle + l^{(n)}_{x,y}\,|x,y,l\rangle + u^{(n)}_{x,y}\,|x,y,u\rangle + d^{(n)}_{x,y}\,|x,y,d\rangle \right], \tag{2}$$

where the notation is self–explicative.

The dynamics of the system is governed by two physical operations: (i), the conditional displacement, represented by the operator $\hat{D}$ acting on $\mathcal{H}_P$

$$\hat{D}\,|x,y,r\rangle = |x+1,y,r\rangle\,, \quad \hat{D}\,|x,y,l\rangle = |x-1,y,l\rangle\,, \tag{3}$$

$$\hat{D}\,|x,y,u\rangle = |x,y+1,u\rangle\,, \quad \hat{D}\,|x,y,d\rangle = |x,y-1,d\rangle\,, \tag{4}$$

i.e., the walker is displaced up, down, rigth or left when the coin is in the state $|r\rangle$, $|l\rangle$, $|u\rangle$, or $|d\rangle$, respectively; and (ii), the unitary transformation acting on

the internal states of the coin, represented by a unitary operator $\hat{C}_4$, which acts on $\mathcal{H}_C$ and that can be written as a 4×4 matrix. Two special cases that have been considered in the literature [33, 34, 35] are the Grover coin

$$\hat{C}_{4,G} = \frac{1}{2} \begin{pmatrix} -1 & 1 & 1 & 1 \\ 1 & -1 & 1 & 1 \\ 1 & 1 & -1 & 1 \\ 1 & 1 & 1 & -1 \end{pmatrix}, \tag{5}$$

and the DFT (discrete Fourier transform) coin

$$\hat{C}_{4,DFT} = \frac{1}{2} \begin{pmatrix} 1 & 1 & 1 & 1 \\ 1 & i & -1 & -i \\ 1 & -1 & 1 & -1 \\ 1 & -i & -1 & i \end{pmatrix}. \tag{6}$$

The state of the system after n steps of the walk can be written as

$$|\psi\rangle_n = \left(\hat{C}_4 \hat{D}\right)^n |\psi\rangle_0 , \tag{7}$$

with $|\psi\rangle_0$ the initial state of the system. Finally, the probability distribution for the particle be at position (x, y) after n iterations is given by

$$P(x, y; n) = \sum_{c \in \{r,l,u,d\}} |\langle x, y, c\, |\psi\rangle_n|^2 = \sum_{c \in \{r,l,u,d\}} P^c(x, y; n), \tag{8}$$

with $P^c(x, y; n) = \left|c_{x,y}^{(n)}\right|^2$ the probability distributions for the particle be at position (x, y) and the coin in state $|c\rangle$, $c \in \{r, l, u, d\}$.

3 Implementation

In order to implement the two–dimensional QW one needs a walker that can walk in two orthogonal directions, a plane, and a four–state qu*d*it. Here we propose an implementation of this process that makes use of classical resources only, following the same spirit as in [28, 29]: The four states of the coin will correspond to four different spatial paths that the light field can follow (what, in the notation of [29], borrowed from [36], corresponds to a four–state position cebit), and the walker role will be played by the field frequency, again as in [28, 29], that can be increased or decreased in the two orthogonal directions corresponding to two orthogonal polarization states of the light field, say **x** and **y**.

In Fig. 1 a schematic of the first step of the QW is schetched. In Fig. 1(a) the four parallel light beams, which propagate along the z–axis and are linearly polarized at $\pi/4$ with respect to the x–axis, first cross an array of devices that perform the conditional displacement, Eqs. (3)–(4): The frequency of the **x**–polarized (**y**–polarized) light is increased or decreased in beams marked with r or

l (u or d), respectively. Each of these devices can consist, e.g., of a polarization beam–splitter (that separates the two–polarization components of the incident beam, the frequency of one of which is suitably increased or decreased by means of an electrooptic modulator), plus two mirrors and a second polarization beam–splitter for recombining the two polarization components back into a single beam after the frequency displacement. After the implementation of $\hat{D}$, the four beams cross a second device in which the $\hat{C}_4$ operation is implemented. Let us see how this operation can be done.

In Fig. 2, a schematic of the device performing $\hat{C}_4$ is shown. The four incoming beams suffer five transformations when crossing the $\hat{C}_4$ device. First, some phase is added to each of the fields, let us call this operation $\hat{F}_1$, which is represented by the operator

$$\hat{F}_j = \begin{pmatrix} e^{i\phi_{j1}} & 0 & 0 & 0 \\ 0 & e^{i\phi_{j2}} & 0 & 0 \\ 0 & 0 & e^{i\phi_{j3}} & 0 \\ 0 & 0 & 0 & e^{i\phi_{j4}} \end{pmatrix}. \tag{9}$$

with $j = 1$. After $\hat{F}_1$, beams r and l (and, separately, beams u and d) are mixed in a beam splitter, let us call this operation $\hat{S}_1$, which in matrix form reads

$$\hat{S}_1 = \begin{pmatrix} \cos\theta_{11} & i\sin\theta_{11} & 0 & 0 \\ i\sin\theta_{11} & \cos\theta_{11} & 0 & 0 \\ 0 & 0 & \cos\theta_{12} & i\sin\theta_{12} \\ 0 & 0 & i\sin\theta_{12} & \cos\theta_{12} \end{pmatrix}. \tag{10}$$

Then, the third step is similar to the first one, i.e., the phase of the four beams are increased again. This is represented by the matrix Eq. (9) with $j = 2$. In the fourth step, similar to the second one, beams r and u (and, separately, beams l and d) are mixed in a beam splitter, let us call this operation $\hat{S}_2$. This is represented by

$$\hat{S}_2 = \begin{pmatrix} \cos\theta_{21} & 0 & i\sin\theta_{21} & 0 \\ i\sin\theta_{21} & 0 & \cos\theta_{21} & 0 \\ 0 & \cos\theta_{22} & 0 & i\sin\theta_{22} \\ 0 & i\sin\theta_{22} & 0 & \cos\theta_{22} \end{pmatrix}. \tag{11}$$

The final step is a new dephasing of the beams, represented by Eq. (9) with $j = 3$. The global effect of these five operations is given by

$$\hat{C}_4 = \hat{F}_3 \cdot \hat{S}_2 \cdot \hat{F}_2 \cdot \hat{S}_1 \cdot \hat{F}_1, \tag{12}$$

whose matrix elements can be writen as

$$\hat{C}_4 = \begin{pmatrix} c_{11}c_{21}e^{i\alpha_{11}} & is_{11}c_{21}e^{i\alpha_{12}} & ic_{12}s_{21}e^{i\alpha_{13}} & -s_{12}s_{21}e^{i\alpha_{14}} \\ ic_{11}s_{21}e^{i\alpha_{21}} & -s_{11}s_{21}e^{i\alpha_{22}} & c_{12}c_{21}e^{i\alpha_{23}} & is_{12}c_{21}e^{i\alpha_{24}} \\ is_{11}c_{22}e^{i\alpha_{31}} & c_{11}c_{22}e^{i\alpha_{32}} & -s_{11}s_{22}e^{i\alpha_{33}} & ic_{12}s_{22}e^{i\alpha_{34}} \\ -s_{11}s_{22}e^{i\alpha_{41}} & ic_{11}s_{22}e^{i\alpha_{42}} & is_{12}c_{22}e^{i\alpha_{43}} & c_{12}c_{22}e^{i\alpha_{44}} \end{pmatrix}, \tag{13}$$

with $s_{ij} = \sin\theta_{ij}$ and $c_{ij} = \cos\theta_{ij}$. The phase factors appearing in (13) are related with the phase factors in (9) through

$$\begin{aligned}
\alpha_{11} &= \phi_{11} + \phi_{21} + \phi_{31}, \qquad \alpha_{12} = \phi_{12} + \phi_{21} + \phi_{31}, && (14)\\
\alpha_{13} &= \phi_{13} + \phi_{23} + \phi_{31}, \qquad \alpha_{14} = \phi_{14} + \phi_{23} + \phi_{31}, && (15)\\
\alpha_{21} &= \phi_{11} + \phi_{21} + \phi_{32}, \qquad \alpha_{22} = \phi_{12} + \phi_{21} + \phi_{32}, && (16)\\
\alpha_{23} &= \phi_{13} + \phi_{23} + \phi_{32}, \qquad \alpha_{24} = \phi_{14} + \phi_{23} + \phi_{32}, && (17)\\
\alpha_{31} &= \phi_{11} + \phi_{22} + \phi_{33}, \qquad \alpha_{32} = \phi_{12} + \phi_{22} + \phi_{33}, && (18)\\
\alpha_{33} &= \phi_{13} + \phi_{24} + \phi_{33}, \qquad \alpha_{34} = \phi_{14} + \phi_{24} + \phi_{33}, && (19)\\
\alpha_{41} &= \phi_{11} + \phi_{22} + \phi_{34}, \qquad \alpha_{42} = \phi_{12} + \phi_{22} + \phi_{34}, && (20)\\
\alpha_{43} &= \phi_{13} + \phi_{24} + \phi_{34}, \qquad \alpha_{44} = \phi_{14} + \phi_{24} + \phi_{34}, && (21)
\end{aligned}$$

Then, the operations performed for constructing $\hat{C}$ provide a class of possible transformations, and depending on the values of parameters θ_{ij} $(i, j = 1, 2)$ and ϕ_{ij}, through Eqs. (21), different transformations are obtained. For example, the Grover coin $\hat{C}_{4G}$, Eq.(5), is obtained by taking

$$\theta_{11} = \theta_{12} = \theta_{21} = \theta_{22} = \pi/4, \tag{22}$$

for the beam splitters, and

$$\begin{aligned}
\phi_{11} &= \frac{\pi}{4},\\
\phi_{12} &= \phi_{14} = \phi_{31} = \phi_{34} = 0,\\
\phi_{13} &= -\phi_{21} = -\phi_{22} = \phi_{32} = \phi_{33} = \frac{\pi}{2},\\
\phi_{23} &= \phi_{24} = \pi, && (23)
\end{aligned}$$

for the phase filters. With respect to the DFT coin, Eq. (6), it is a little bit more complicated: By taking again (22) for the beam splitters and

$$\begin{aligned}
\phi_{11} &= \phi_{13} = \phi_{22} = \phi_{23} = \phi_{24} = 0,\\
\phi_{12} &= \phi_{14} = -\phi_{21} = \phi_{31} = \phi_{33} = -\frac{\pi}{2},\\
\phi_{32} &= \phi_{34} = -\pi, && (24)
\end{aligned}$$

for the phase filters one obtains

$$\hat{C}'_{4,DFT} = \frac{1}{2}\begin{pmatrix} 1 & 1 & 1 & 1\\ 1 & 1 & -1 & -1\\ 1 & -1 & i & -i\\ 1 & -1 & -i & i \end{pmatrix}, \tag{25}$$

which is very similar to Eq. (6). In fact, the DFT matrix is obtained from Eq. (25) by making

$$\hat{C}_{4,DFT} = \hat{A} \cdot \hat{C}'_{4,DFT} \cdot \hat{A}^{-1}, \tag{26}$$

with

$$\hat{A} = \begin{pmatrix} 1 & 0 & 0 & 0 \\ 0 & 0 & 1 & 0 \\ 0 & 1 & 0 & 0 \\ 0 & 0 & 0 & 1 \end{pmatrix}. \tag{27}$$

Notice that operator $\hat{A}$ interchanges indexes 2 and 3, what physicaly means that the light beams l and u must be permuted at the entrance and at the exit of the scheme in Fig. 1, what can be done by means of a Kepler telescope.

Up to this point we have seen that a single step of the QW in two dimensions can be performed by the device represented in Fig. 1. In order to perform n steps, we only need to reinject the output of the device at its entrance. This is readily achieved by using optical cavities (in Fig. 3 we show a scheme of the complete setup). In the device, the initial condition is chosen by fixing the phases and intensities of the four incident beams, and at the cavity output, the frequency of the emerging field performs the two–dimensional QW. Of course the output field spectrum must be analyzed, with polarizers and frequency analizers, in order to extract the two–dimensional QW: After passing a linear polarizer set to 0° (90°), from the spectrum of the polarized field one obtains $P(x, 0; n)$ ($P(0, y; n)$), which suitably combined provide $P(x, y; n)$.

Let us note that the use of optical cavities imposses some restrictions (see [29] for a more detailed discussion on these) as, e.g., the intracavity field frequencies must resonate with the cavity modes, unless it be a pulse with a duration shorter than the cavity roundtrip time. Also one must take care that the optical paths of the different beams be equal and that the polarization of the light field does not suffer variations along the roundtrip (what prevents the use of optical fiber cavities). But these technicalities can be readily solved.

Finally it is worth commenting that the device we are proposing here can also implement the QW on the line with two coins, as recently proposed in Ref. [16]. For that purpose, we only need to not distinguish between the two polarization states of the light, i.e., the walk has to be performed on a unique dimension, namely, the frequency of the field.

4 Conclusion

We have proposed an experimental setup for the implementation of the two–dimensional QW. Our device consists of classical resources only and has the advantage that the unitary transformation performed in it is tunable in the sense that by modifying the parameters of the system, different unitary transformations can be easily reproduced. The device we are proposing can be generalized to implement the QW on the circle in either one or the two dimensions by following the same technical solutions already proposed for the one–dimensional QW [29].

The fact that the two–dimensional QW can be implemented by only classical means suggests, as it was the case for the one–dimensional QW [28, 29], that it is a classical process in which nonlocal entanglement plays no role. Recently

[32] this conclussion has been discussed and we refer the reader to Ref. [32] for more details, as we are not going to discuss this here. Nevertheless, let us emphasize that in higher dimensional QWs, e.g., the three–dimensional one, quantum entanglement manifests in the amount of classical resources needed for the implementation, as the implementation of the three necessary qubits requires 8 light beams (in general, n qubits would require 2^n light beams [36]). In this sense, the two-dimensional QW is the higher dimensional one that can be implemented classically without a sensible difference in the resources needed as compared with a *quantum* implementation.

This work has been financially supported by Spanish Ministerio de Ciencia y Tecnología and European Union FEDER, Project BFM2002-04369-C04-01. We gratefully acknowledge fruitful discussions with Germán J. de Valcárcel.

References

[1] A. Ambainis, e-print quant-ph/0403120

[2] J. Kempe, Contemp. Phys. **44**, 307 (2003)

[3] D. Meyer, J. Stat. Phys. **85**, 551 (1996)

[4] Y. Aharonov, L. Davidovich, and N. Zagury, Phys. Rev. A **48**, 1687 (1993)

[5] E. Fahri and S. Gutmann, Phys. Rev. A **58**, 915 (1998)

[6] A. Nayak, and A. Vishwanath, e-print quant-ph/0010117

[7] N. Konno, Quantum Information Processing **1**, 345 (2002)

[8] H.A. Carteret, M.E.H. Ismail, and B. Richmond, J. Phys. A **36**, 8775 (2003)

[9] V. Kendon and B. Tregenna, Phys. Rev. A **67**, 042315 (2003)

[10] C.C. López and J.P. Paz, Phys. Rev. A **68**, 052305 (2003)

[11] P.L. Knight, E. Roldán, and J.E. Sipe, J. Mod. Opt. **51**, 1761 (2004)

[12] E. Feldman and M. Hillery, Phys. Lett. A **324**, 277 (2004)

[13] A. Romanelli, A.C. Sicardi Schifino, R. Siri, G. Abal, A. Auyuanet, and R. Donangelo, Physica A **338**, 395 (2004)

[14] A. Romanelli, R. Siri, G. Abal, A. Auyuanet, and R. Donangelo, Physica A **347**, 137 (2005)

[15] A. Wójcik, T. Lukzak, P. Kurzyński, A. Grudka, and M. Bednarska, Phys. Rev. Lett. **93**, 180601 (2004)

[16] N. Inui and N. Konno, e-print quant-ph/0403153

[17] O. Buerschaper and K. Burnett, e-print quant-ph/0406039

[18] P. Ribeiro, P. Milman, and R. Mosseri, e-print quant-ph/0406071

[19] A. Romanelli, A. Auyuanet, R. Siri, G. Abal, and R. Donangelo, e-print quant-ph/0408183

[20] Y. Omar, N. Paunkovic, L. Sheridan, and S. Bose, e-print quant-ph/0411065

[21] S.E. Venegas–Andraca, J.L. Ball, K. Burnett, and S. Bose, e-print quant-ph/0411151

[22] B.C. Travaglione and G.J. Milburn, Phys. Rev. A **65**, 032310 (2002)

[23] W. Dür, R. Raussendorf, V.M. Kendon, and H.-J. Briegel, Phys. Rev. A **66**, 052319 (2002)

[24] B.C. Sanders, S.D. Bartlett, B. Tregenna, and P.L. Knight, Phys. Rev. A **67**, 042305 (2003)

[25] Z. Zhao, J. Du, H. Li, T. Yang, Z.-B Chen, and J.-W. Pan, e-print quant-ph/0212149

[26] T. Di, M. Hillery, and M.S. Zubairy, Phys. Rev. A **70**, 032304 (2004)

[27] M. Hillery, J. Bergou, and E. Feldman, Phys. Rev. A **68**, 032314 (2003)

[28] P.L. Knight, E. Roldán, and J.E. Sipe, Phys. Rev. A **68**, 020301(R) (2003)

[29] P.L. Knight, E. Roldán, and J.E. Sipe, Opt. Commun. **227**, 147 (2003); erratum **232** (2004) 443

[30] H. Jeong, M. Paternostro, and M. S. Kim, Phys. Rev. A **69**, 012310 (2004)

[31] D. Bouwmeester, I. Marzoli, G.P. Karman, W. Schleich, and J.P. Woerdman, Phys. Rev. A **61**, 013410 (2000)

[32] V. Kendon and B. Tregenna, Phys. Rev. A **71**, 022307 (2005)

[33] T.D. Mackay, S.D. Bartlett, S.L. Stephenson, and B.C. Sanders, J. Phys. A **35**, 2745 (2002)

[34] B. Tregenna, W. Flanagan, R. Maile, and V. Kendon, New. J. Phys. **5**, 83.1 (2003)

[35] N. Inui, Y. Konishi, and N. Konno, Phys. Rev. A **69**, 052323 (2004)

[36] R.J.C. Spreeuw, Phys. Rev. A **63**, 062302 (2001)

Figure Captions

Fig.1. Schematic of the device performing a single step of the two–dimensional QW. In the boxes marked with $+\omega_{x(y)}$ and $-\omega_{x(y)}$, the frequency of the x (y) polarization component of the field in increased or decreased by an amount $\omega_{x(y)}$. In the box marked with $\hat{C}_4$, a unitary transformation of the incoming vector $(r, l, u, d)^T$ is performed (see Fig. 2 for details).

Fig.2. Schematic of the device performing the unitary transformation $\hat{C}_4$. The boxes marked with ϕ_{ij} are dephasing elements that increase the field phase in ϕ_{ij}. The rounded crossings indicate the presence of a beam–splitter.

Fig.3. Schematic of the optical cavity propopsed for implementing the two–dimensional QW. The four optical paths are marked with a different type of line for gguiding the eye. The black (grey) rectangles correspond to perfectly (patially) reflecting mirrors.

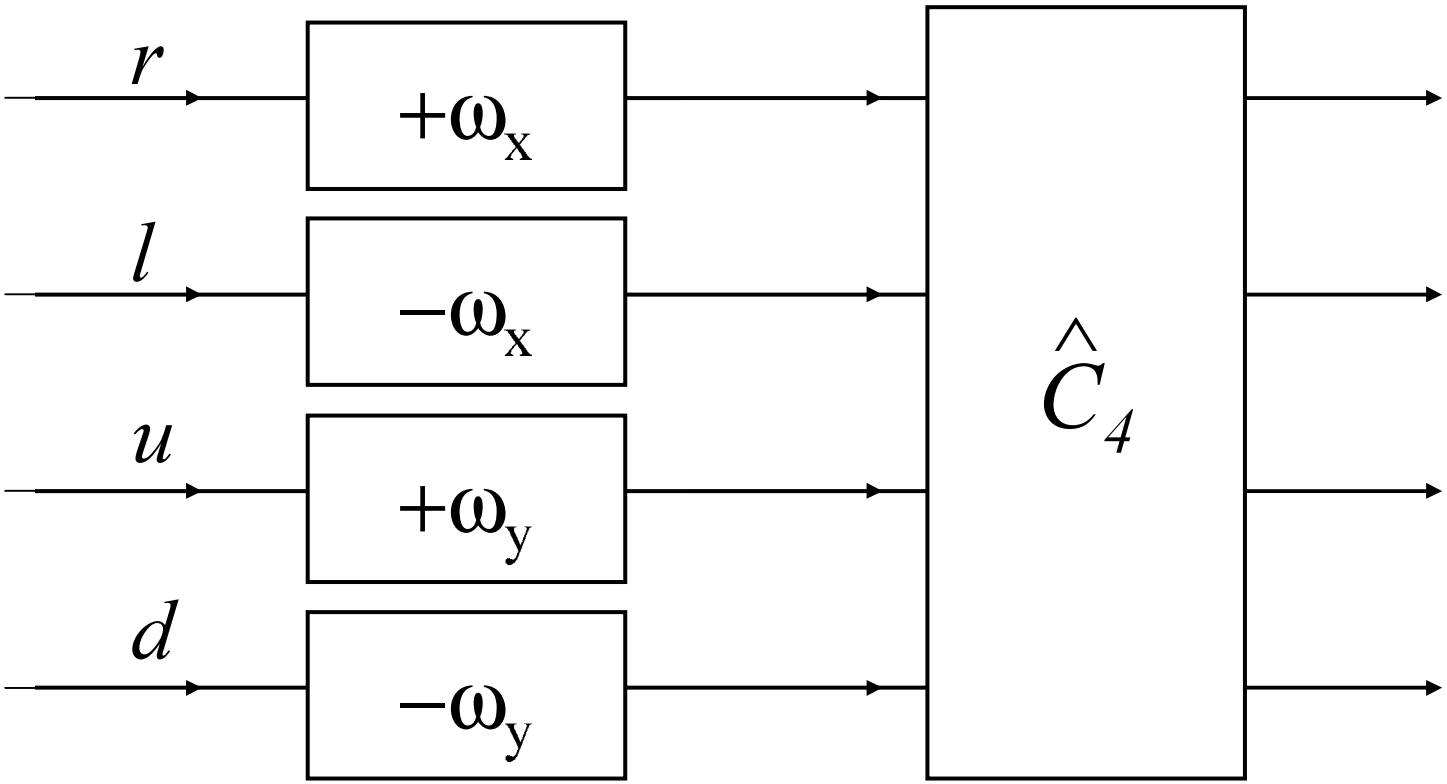

Roldán and Soriano, Fig. 1

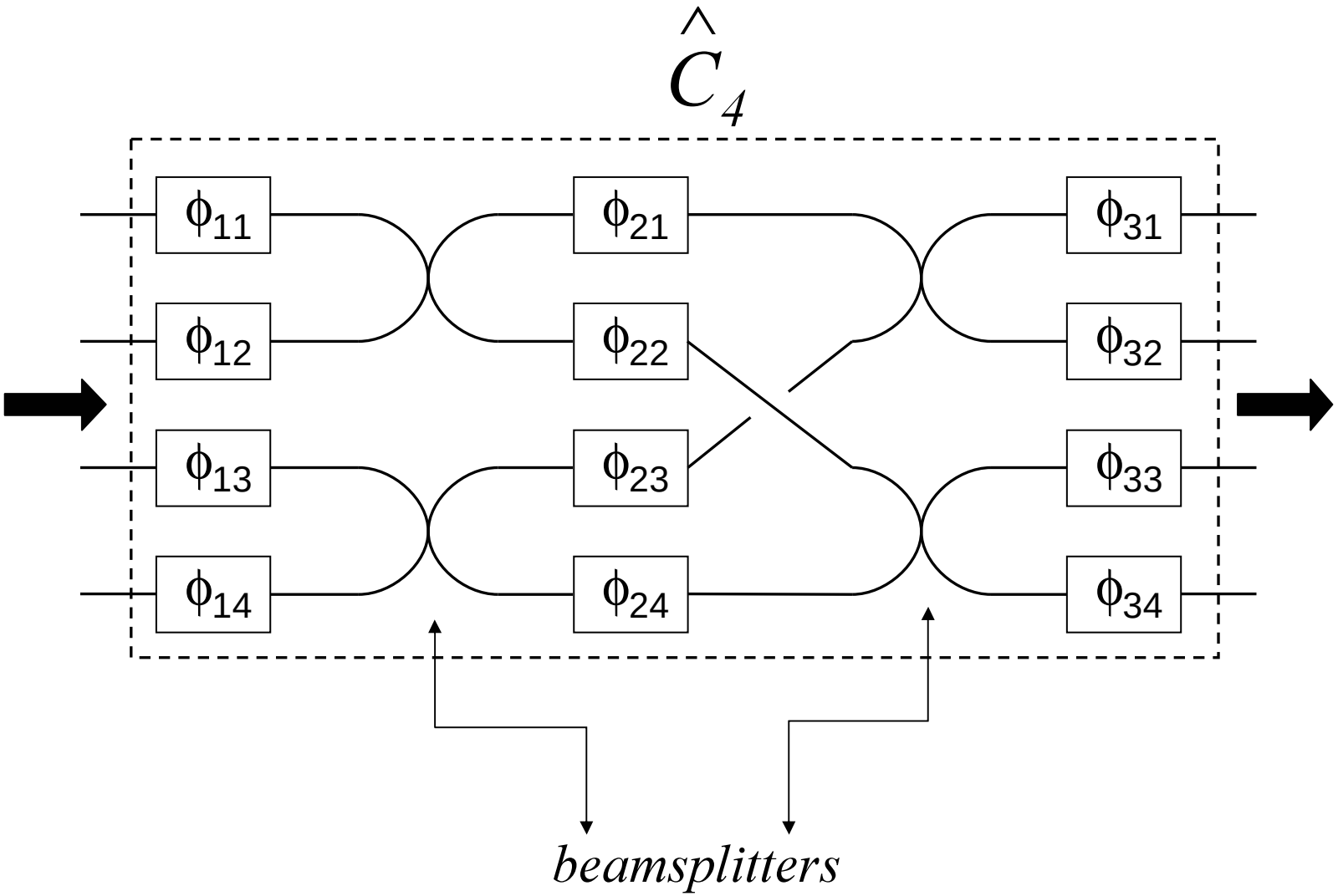

Roldán and Soriano, Fig. 2

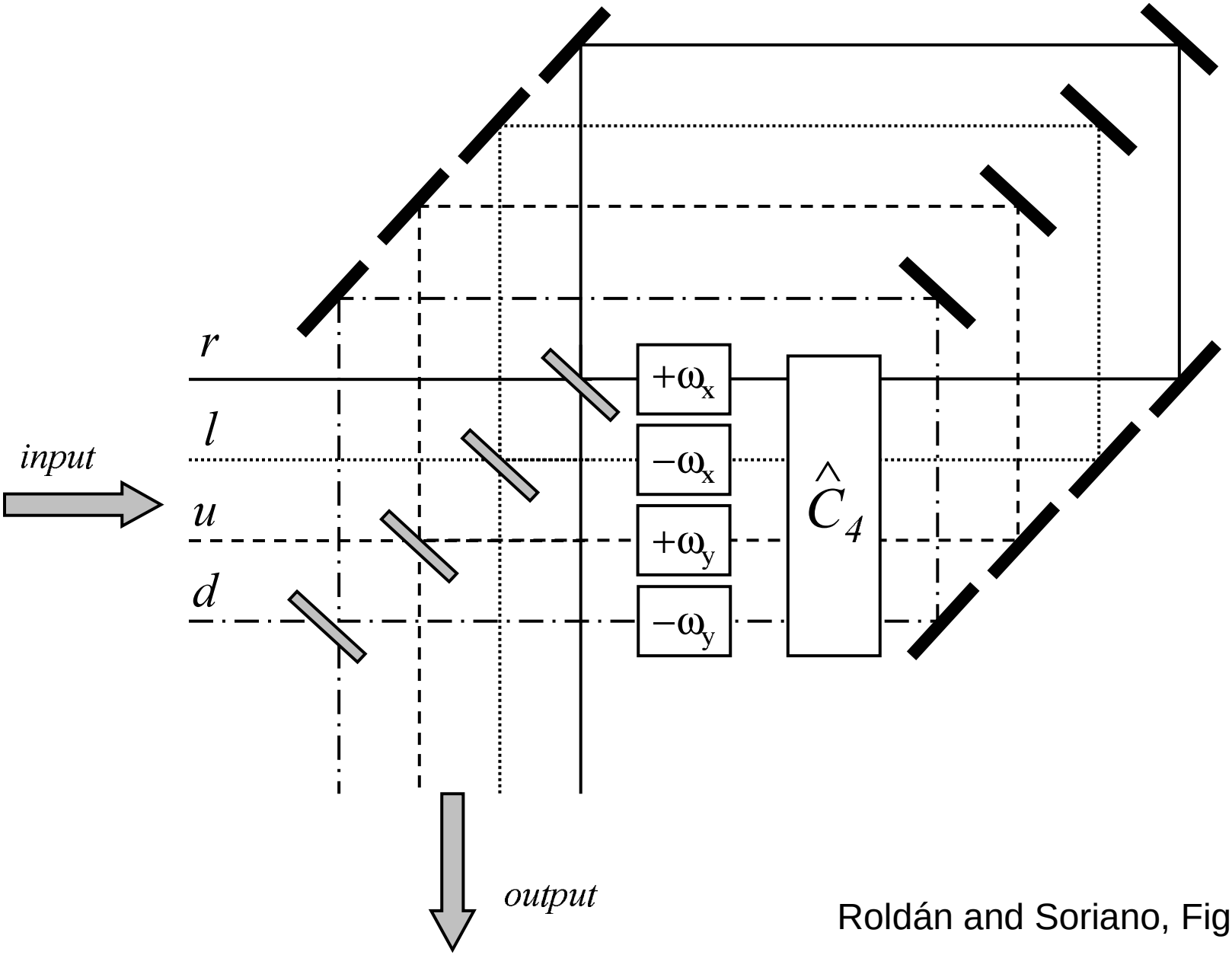

Roldán and Soriano, Fig. 3